DWG.NO.HW0387313

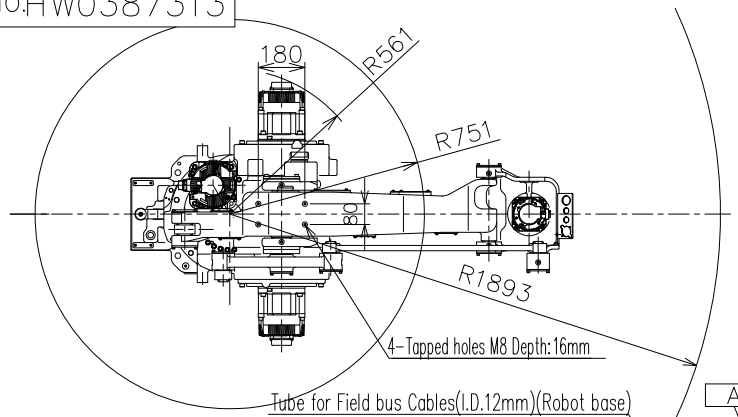

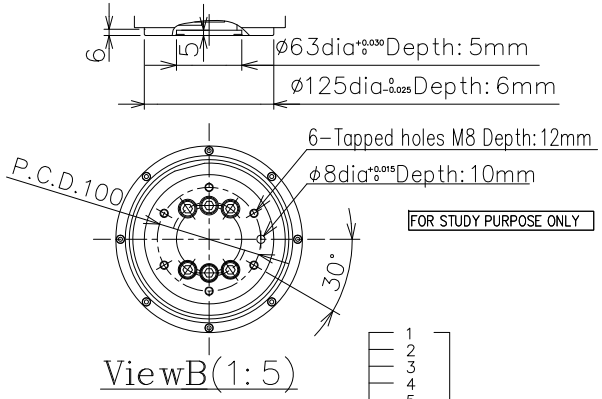

ViewB(1:5)

FOR STUDY PURPOSE ONLY

Item \ Model		MOTOMAN-MPK50II
Configuration		Articulated Robot
Degree of freedom		4
Payload		50kg
Repeatability		±0.5 mm
Range of Motion	S-Axis(Turning)	±180°
	L-Axis(Lower Arm)	+80°,-35°
	U-Axis(Upper Arm)	+15°,-105°
	T-Axis(Twist)	±350°
Max Speed	S-Axis	3.23rad/s(185°/s)
	L-Axis	3.75rad/s(215°/s)
	U-Axis	3.75rad/s(215°/s)
	T-Axis	6.53rad/s(374°/s)
Allowable Inertia (GD²/4)	T-Axis	5.5kg・m²
Approx.Robot mass		670kg
Ambient Conditions	Temperature	0~45°C
	Humidity	20~80%RH (non-condensing)
	Vibration	4.9m/s²(0.5G)以下
	Others	・Free from corrosive gases or liquids,or explosive gases. ・Free from exposure to water, oil, or dust. ・Free from excessive electrical noise. (plasma)
Power Requirements		4.0KVA

・SI units are used in this table.
However,gravitational unit is used in ( ).
・Repeatitive Positioning Accuracy coforms to JIS B 8432.

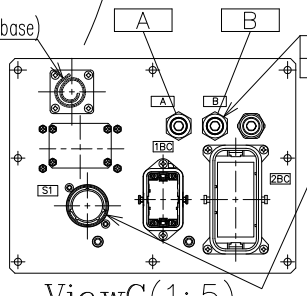

ViewC(1:5)

Used Pin Number

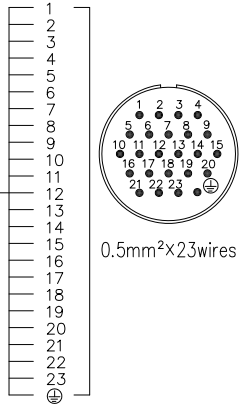

Detail of Reserved Cable connector

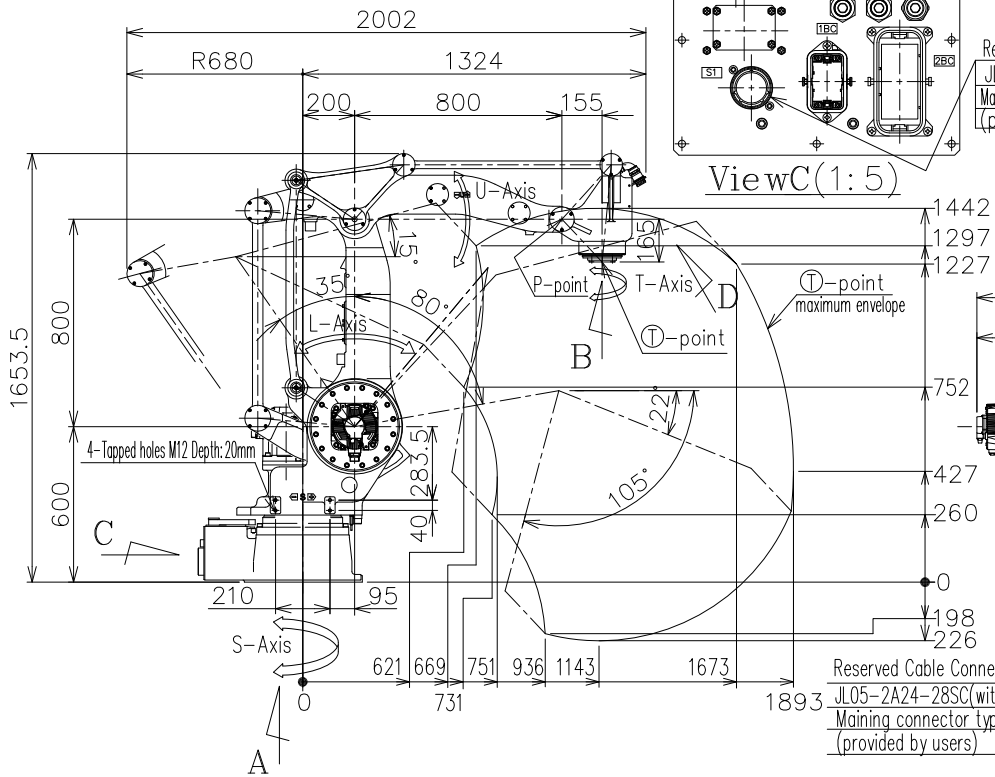

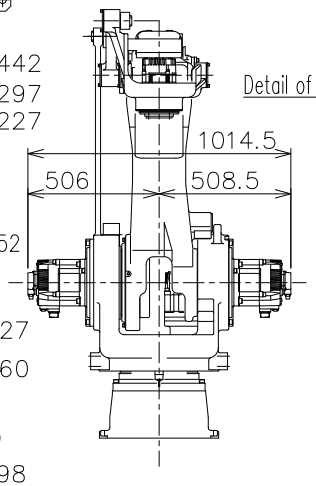

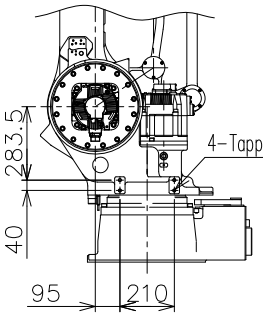

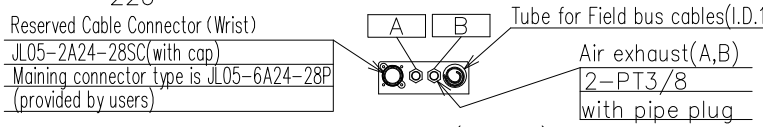

viewD(1:10)

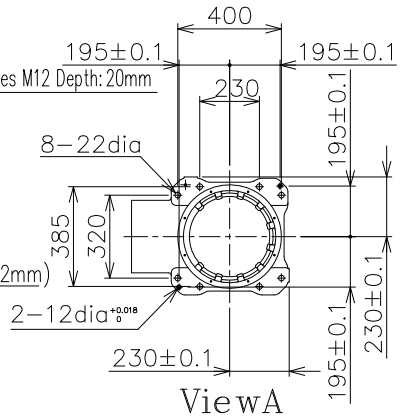

ViewA

REVISIONS	SCALE 1:20	YASKAWA 株式会社 安川電機	作図 DRAW. / 検図 CHECK. / 承認 APPR.	TITLE MOTOMAN-MPK50II DIMENSION DIAGRAM	DWG.NO. HW0387313	REV.